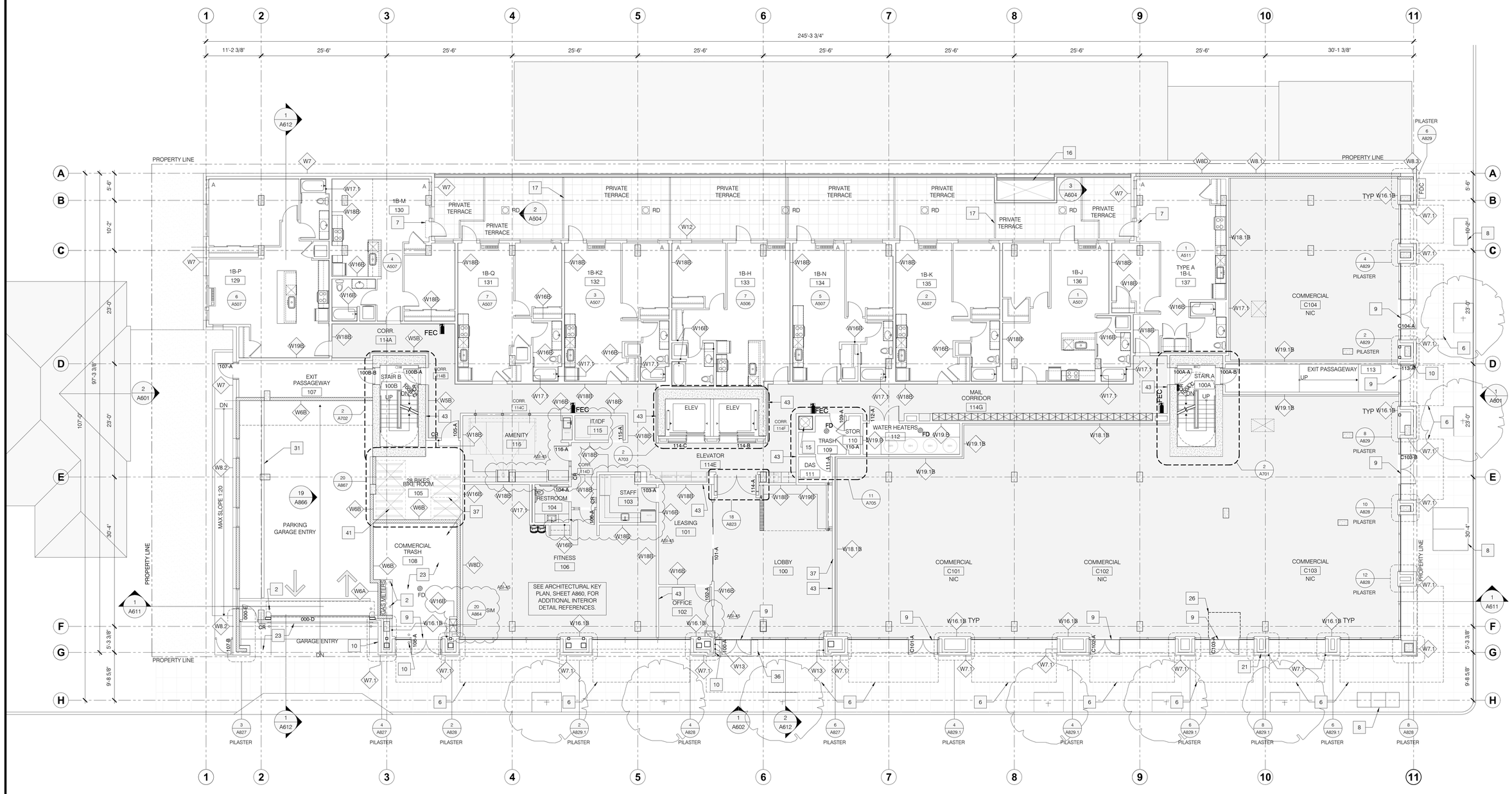


## FLOOR PLAN - LEVEL 1

A301 SCALE: 1/8"=1'-0"

## BUILDING PLAN GENERAL NOTES

1. SOUND MANAGEMENT BETWEEN UNITS IS CRITICAL. ALL UNITS ARE TO BE SEPARATED BY SOUND INSULATION BATTS IN ALL PARTITIONS BETWEEN UNITS AND AT ALL FLOOR-CEILING ASSEMBLIES AS DETAILED. ALL GYP. BOARD AT THE FLOOR JOINTS BETWEEN 3RD FLR UNITS ARE TO BE SEALED W/ ACOUSTIC SEALANT. UPPER FLRS ARE SEALED WITH GYP. TOPPING. ANY ELECTRICAL OUTLETS ON THE COMMON WALL BETWEEN UNITS MUST BE STAGGERED ONE FULL STUD SPACE AND SEALED WITH ACOUSTIC SEALANT
2. PROVIDE DRAFT-STOPS IN ALL CONCEALED SPACES @ 10'-0" O.C. HORIZONTALLY AND VERTICALLY PER OSSC
3. PROVIDE PLUMBING ACCESS DOORS WHERE REQUIRED AND VERIFY LOCATION WITH THE ARCHITECT
4. 1/4"=1'-0" SCALE PLANS TAKE PRECEDENT OVER 1/8"=1'-0" PLANS, COORDINATE ALL DIMENSIONS W/ 1/4"=1'-0" PLANS
5. DESIGN & INSTALLATION OF ALL MECH., ELEC., SPRINKLER & PLUMBING SYSTEMS SHALL BE AS REQ'D. TO MAINTAIN INTEGRITY OF REQUIRED RATED ASSEMBLIES
6. COORDINATE ROUGH PLUMBING LOCATIONS WITH ACTUAL CABINET LAYOUTS
7. INSTALL ATTIC ACCESS PANELS WHERE SHOWN ON REFLECTED CEILING PLANS
8. WALL TYPES FOR STAIR / ELEV ARE SHOWN ON ENLARGED PLANS
9. COORDINATE COMMON AREAS WITH INTERIOR DESIGN DRAWINGS - REFER TO INTERIOR DRAWINGS FOR DIMENSIONS AND DETAILS
10. COORDINATE COMMON EXTERIOR AREAS WITH LANDSCAPE DESIGN DRAWINGS - REFER TO LANDSCAPE DRAWINGS FOR DIMENSIONS AND DETAILS
11. FOR HOSE BIBB LOCATIONS SEE BIDDER DESIGNED PLUMBING DRAWINGS
12. NOT ALL KEYNOTES ARE USED PER SHEET.
13. SEE SHEET G204 FOR ACCESSIBILITY STANDARDS FOR MOUNTING HEIGHTS, REACH RANGES AND MINIMUM CLEARANCES.
14. AT KITCHEN AND BATHROOM WALLS WITH FIRE RATING PER WALL TYPES SCHEDULE, SEAL ALL PENETRATIONS TO MAINTAIN FIRE RATING PER CODE
15. SEE SHEET A840 FOR BALCONY PLANS
16. SEE SHEETS A846-A848 FOR TERRACE DECK PLANS
17. SEE SHEET A850 FOR CANOPY PLANS
18. AT LEVELS 1-2, WHERE NO WALL TYPE TAG OR DETAIL IS SHOWN, THE DEFAULT WALL TYPE IS W16A. REFER TO SHEET A801 FOR ASSEMBLY
19. AT LEVELS 3-7, WHERE NO WALL TYPE TAG OR DETAIL IS SHOWN, THE DEFAULT WALL TYPE IS W34A. REFER TO SHEET A802 FOR ASSEMBLY

## BUILDING PLAN KEY NOTES

1. WHEEL STOP
2. STEEL BOLLARD. SEE DETAIL 3/A866. ALLOW 4'-0" CLEAR MAINTENANCE CLEARANCE IN FRONT OF ELECTRIC METERS.
3. HOSE BIBB - FOR HOSE BIBB LOCATIONS SEE BIDDER-DESIGNED PLUMBING DRAWINGS
4. CONTINUOUS RATED MECHANICAL SHAFT
5. LINE OF UNIT BALCONY. SEE SHEET A840 FOR BALCONY KEY PLANS
6. CANOPY. SEE SHEET A850 FOR CANOPY KEY PLANS
7. PTAC UNIT ABOVE DOOR
8. BELOW GRADE UTILITY VAULTS. SEE CIVIL
9. FEATHER CONCRETE AT DOOR TO MATCH CONCRETE ELEVATIONS WITH A SLOPE NOT TO EXCEED 1:48
10. FIRE DEPARTMENT KEY BOX AT A HEIGHT OF 48" AFF PER SECTION 506, OFC.
11. PAVEMENT MARKING, INTERNATIONAL SYMBOL OF ACCESSIBILITY, SEE DETAIL 2/A866
12. ACCESSIBLE PARKING SPACE IDENTIFICATION SIGN R7-8. WALL MOUNT, MOUNTING HEIGHT: 60 INCHES FROM FINISH FLOOR TO BOTTOM OF SIGN. SEE DETAIL 1/A866
13. "WHEELCHAIR ONLY" VAN ACCESSIBLE PARKING SPACE IDENTIFICATION SIGNS R7-8 ABOVE AND R7-8P BELOW. WALL MOUNT, MOUNTING HEIGHT: 60 INCHES FROM FINISH FLOOR TO BOTTOM OF SIGN R7-8P. SEE DETAIL 1/A866
14. PARKING LOT STRIPING
15. TRASH CHUTE
16. EXHAUST VENT FOR GARAGE. SEE DETAIL 16/A831
17. ALUMINUM FRAME AND SLAT PRIVACY SCREEN
18. ROOF PATIO TO BE COORDINATED WITH LANDSCAPE
19. PLANTER
20. STEEL FRAME AND WIRE MESH BIKE ENCLOSURE. SEE DETAIL 1/A867
21. NOT USED
22. NOT USED
23. TRAFFIC COATING. AT GARAGE ENTRANCE RAMP, PROVIDE COATING FROM SIDEWALK TO TRENCH DRAIN AT TOP OF RAMP. PROVIDE TRAFFIC COATING AT ROOMS KEYNOTED SUCH AS TRASH ROOM FLOOR (STOPS AT THRESHOLD)
24. EXTENTS OF BELOW SLAB VAPOR BARRIER TO EXTEND 24" PAST FACE OF WALLS
25. BACK TO BACK APPLIANCES AT RATED WALLS REQUIRE FULL RATED ASSEMBLY, INCLUDING ALL LAYERS OF GYP TO CONTINUE PAST APPLIANCE. SEE DETAIL 8/A868
26. TRANSITION FROM SIDEWALK TO FINISH FLOOR BY TENNANT
27. NOT USED
28. BOTTOM OF ENCLOSED STAIR. PROVIDE 3" X 48" ACCESS PANEL
29. 6" CRASHWALL, T.O. 42" HIGH, MIN. NOTE: WALL WILL SLOPE W/ GRADE
30. STEEL GUARDRAIL, SEE DETAIL 17/A866
31. CONCRETE CURB
32. ALIGN
33. ROOF DRAIN
34. DRAFT STOP WALLS AT ATTIC EXTEND FROM BOTTOM OF ROOF SHEATHING TO 18" BELOW HEAD OF SPRINKLER MIN. COORDINATE WITH FIRE PROTECTION DESIGN/BUILD CONTRACTOR. NOTE: LINES SHOWN DASHED ARE WALLS AT UNITS BELOW CEILING
35. BIKE "FIX IT" STATION
36. COORDINATE LOCATION OF WALK-OFF MAT WITH GHID. MAY NEED DEPRESSED SLAB
37. ADDITIONAL LAYER OF 1/2" GYP, THIS SIDE OF WALL, SEE DETAIL 6/I.D.3.1.
38. ELECTRIC METER FOR COMMERCIAL TENANTS ON LEVEL 1 ABOVE, SEE DRAWING E401. PROVIDE PLYWOOD EQUIPMENT BACKING PANEL.
39. LYNCH TYPE CATCH BASIN, SEE DRAWING P300.
40. UNCONDITIONED SPACE
41. BIKE RACK FOR BIKE PARKING/STORAGE. SEE DETAIL 8/A867.
42. VERTICAL BIKE PARKING/STORAGE. SEE DETAIL 13/A867.
43. ART WALL - PROVIDE BLOCKING FOR ART WORK. SEE KEYPLANS ON SHEET A860 FOR EXTENTS OF BLOCKING AND DETAIL REFERENCES.

## SYMBOLS LEGEND

| | |
|---|---|
| | SEE INTERIOR DESIGN DRAWINGS FOR ADDITIONAL INFO AT AREAS SHOWN SHADED. TYPICAL AT ALL COMMON AREAS |
| 1B-A | UNIT TYPE |
| 100 | UNIT NUMBER |
| 1/A100 | UNIT PLAN DETAIL TAG |
| FEC | FIRE EXTINGUISHER CABINET |
| FE | FIRE EXTINGUISHER, WALL-MOUNT |
| EV | ELECTRIC VEHICLE PARKING SPACE |
| CR | CARD READER |
| ACD | ACCESS CONTROL DIRECTORY |

REGISTERED ARCHITECT · STATE OF OREGON · ROBERT S. LEEB · PORTLAND, OREGON


Leeb Architects
308 SW First Avenue
Suite 200
Portland, Or 97204
Phone: 503.228.2840
Fax: 503.228.2907
leebarc.com


Project Title:
MODERA BUCKMAN
APARTMENTS
MILL CREEK RESIDENTIAL
220 NW 2ND AVENUE SUITE 900
PORTLAND, OR 97209

Drawing Title:
PLAN - LEVEL 1

| | |
|---|---|
| Date: | 06/02/17 |
| Scale: | 1/8" = 1'-0" |
| Drawn By: | JBJ |
| Project No: | A16-16 |

Revision:
- A2 4.19.19 - AS1045 - INTERIOR L1 AND L7 REVISIONS
- A3 5.16.19 - AS1056 - ZONING PLAN CHECK REVIEW RESPONSE
- A4 7.25.19 - AS1069 - MECHANICAL PLAN SERVICE DOORS
- A5 9.9.19 - AS1084 - CONSTRUCTION SET PACKAGE
- A6 10.18.19 - AS1097 - CORRIDOR AND ELEVATOR
- A7 12.20.19 - AS1123 - UPDATED INTERIORS PACKAGE
- A8 07.20.18 - AS1028 - DOOR PACKAGE REVISIONS
- A9 10.26.18 - ZONING PLAN CHECK REVIEW RESPONSE
- A10 11.09.18 - AS1033 - UPDATED INTERIORS PACKAGE
- A11 5.16.18 - COORDINATED DRAWING SET PACKAGE

A
301

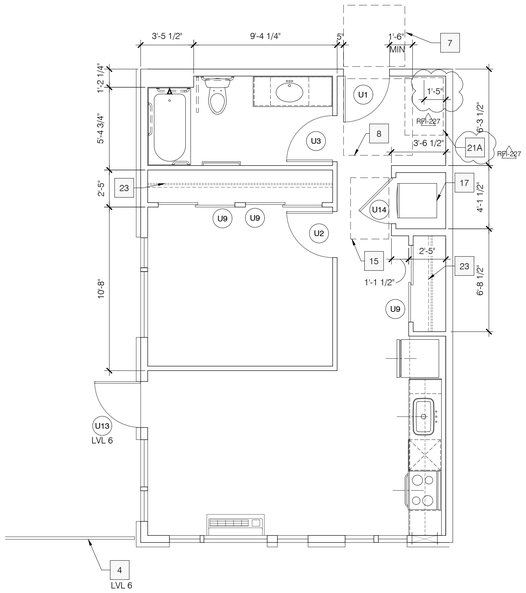


1 A506 UNIT PLAN - 1 BEDRM (1B-D L6-7)

SCALE: 1/4"=1'-0"

| 1B-D | | | |
|---|---|---|---|
| LEVEL: | 6-7 | 635 SF | |
| TOTAL: 2 | | | |

KITCHEN: K13 (6/A532)
BATH: 4/A535

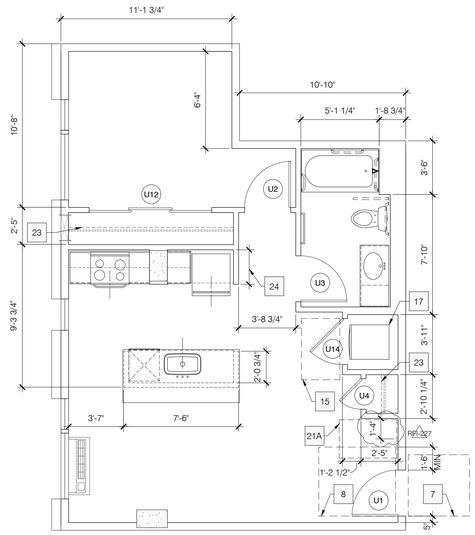


2 A506 UNIT PLAN - 1 BEDRM (1B-E L2)

SCALE: 1/4"=1'-0"

| 1B-E | | | |
|---|---|---|---|
| LEVEL: | 3-5 | 652 SF | |
| LEVEL: | 2 | 651 SF | |
| TOTAL: 4 | | | |

KITCHEN: K14 (7/A532)
BATH: 1/A535

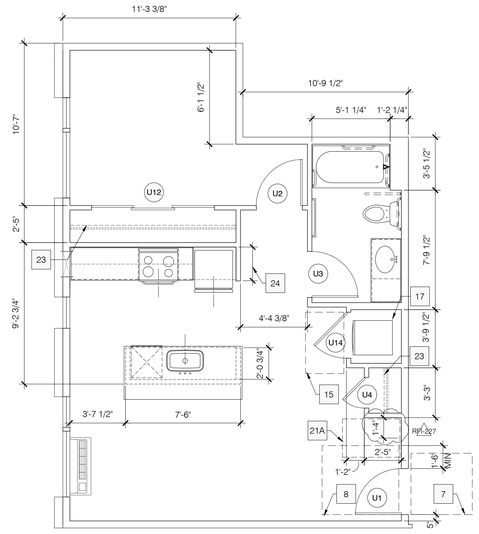


3 A506 UNIT PLAN - 1 BEDRM (1B-E L3-5)

SCALE: 1/4"=1'-0"

| 1B-E | | | |
|---|---|---|---|
| LEVEL: | 3-5 | 652 SF | |
| LEVEL: | 2 | 651 SF | |
| TOTAL: 4 | | | |

KITCHEN: K2 (4/A531)
BATH:1/A535

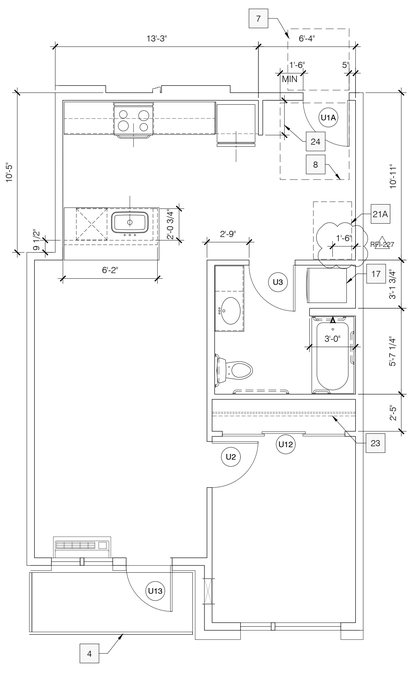


4 A506 UNIT PLAN - 1 BEDRM (1B-F L2)

SCALE: 1/4"=1'-0"

| 1B-F | | | |
|---|---|---|---|
| LEVEL: | 3-6 | 716 SF | |
| LEVEL: | 2 | 696 SF | |
| TOTAL: 5 | | | |

KITCHEN: K18 (2/A533)
BATH: 8/A535

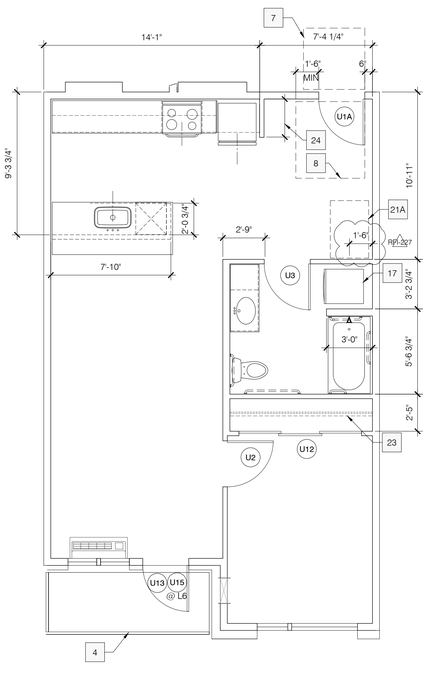


5 A506 UNIT PLAN - 1 BEDRM (1B-F L3-6)

SCALE: 1/4"=1'-0"

KITCHEN: K19 (3/A533)
BATH: 8/A535

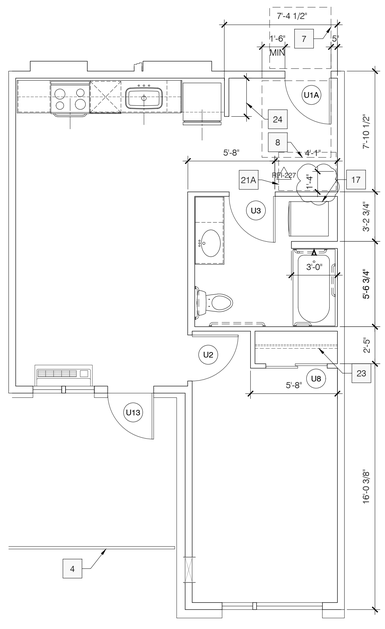


6 A506 UNIT PLAN - 1 BEDRM (1B-G L7)

SCALE: 1/4"=1'-0"

| 1B-G | | | |
|---|---|---|---|
| LEVEL: | 7 | 609 SF | |
| TOTAL: 1 | | | |

KITCHEN: K13 (6/A532)
BATH: 8/A535

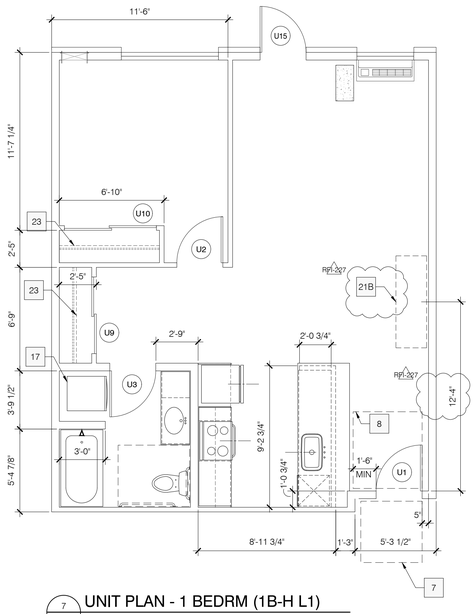


7 A506 UNIT PLAN - 1 BEDRM (1B-H L1)

SCALE: 1/4"=1'-0"

| 1B-H | | | |
|---|---|---|---|
| LEVEL: | 1 | 746 SF | |
| TOTAL: 1 | | | |

KITCHEN: K5 (7/A531)
BATH: 8/A535

## UNIT PLAN GENERAL NOTES

1.

## UNIT PLAN KEY NOTES

1. COLUMN LOCATION VARIES WHERE UNITS REOCCUR - SEE FLOOR PLAN (A300 SERIES) FOR COLUMN GRID LAYOUT
2. DASHED SQUARE INDICATES 12' x 12' AREA FOR REFERENCE (LIVING ROOM TYPICAL)
3. DASHED SQUARE INDICATES 10' x 10' AREA FOR REFERENCE (BEDROOM TYPICAL)
4. REFER TO BUILDING FLOOR PLANS SHEETS A300- FOR BALCONY LOCATIONS.
5. OPEN SHELVING. PROVIDE (4) FIXED SHELVES. 1 INCH THICK MDF CONSTRUCTION, PAINTED FINISH WITH ACRYLIC ENAMEL, COLOR TO MATCH WALLS. SOFFIT HEAD TO MATCH ADJACENT DOOR HEAD HEIGHT
6. SEE FLOOR PLANS AND DOOR SCHEDULE FOR DOOR INFORMATION
7. MANEUVERING CLEARANCE AT PRIMARY UNIT ENTRANCE, FRONT APPROACH FROM PUBLIC CORRIDOR PUSH SIDE: PROVIDE 48" MIN PERPENDICULAR TO DOORWAY AND 12" MIN BEYOND LATCH PARALLEL TO DOORWAY PER ICC/ANSI A117.1 SECTIONS 1003.5 AND 1004.5.11. DOOR HARDWARE INCLUDES LATCH AND CLOSER
8. MANEUVERING CLEARANCE AT PRIMARY UNIT ENTRANCE, FRONT APPROACH FROM UNIT SIDE: PROVIDE 60" MIN PERPENDICULAR TO DOORWAY AND 18" MIN BEYOND THE LATCH PARALLEL TO DOORWAY PER ICC/ANSI A117.1 SECTION 1003.5.
9. MANEUVERING CLEARANCE AT DOORWAYS, FRONT APPROACH FROM PULL SIDE: PROVIDE 60" MIN PERPENDICULAR TO DOORWAY AND 18" MIN BEYOND LATCH PARALLEL TO DOORWAY PER ICC/ANSI A117.1 SECTION 1003.5.
10. MANEUVERING CLEARANCE AT DOORWAYS, FRONT APPROACH FROM PUSH SIDE: PROVIDE 48" MIN PERPENDICULAR TO DOORWAY AND WIDTH OF DOORWAY PARALLEL TO DOORWAY PER ICC/ANSI A117.1 SECTION 1003.5.
11. MANEUVERING CLEARANCE AT DOORWAYS, LATCH APPROACH FROM PULL SIDE: PROVIDE 48" MIN PERPENDICULAR TO DOORWAY AND 24" BEYOND LATCH PARALLEL TO DOORWAY PER ICC/ANSI A117.1 SECTION 1003.5.

## UNIT PLAN KEY NOTES CONT.

12. MANEUVERING CLEARANCE AT DOORWAYS, LATCH APPROACH FROM PUSH SIDE: PROVIDE 42" MIN PERPENDICULAR TO DOORWAYS AND 24" MIN BEYOND THE LATCH PARALLEL TO DOORWAY PER ICC/ANSI A117.1 SECTION 1003.5.
13. A TURNING SPACE WITH A 60" MIN DIAMETER PER ICC/ANSI A117.1 SECTION 1003.3.2.
14. A TURNING SPACE WITH A 'T' SHAPE WITHIN A 60" MIN. SQUARE WITH ARMS AND BASE 36" MIN. IN WIDTH PER ICC ANSI A117.1 SECTION 1003.3.2.
15. CLEAR FLOOR SPACE OF 30"x48" FOR A PARALLEL OR FORWARD APPROACH TO LAUNDRY EQUIPMENT PER ICC/ANSI A117.1 1003.10 AND 1004.10.
16. CLEAR FLOOR SPACE OF 30"x48" FOR A PARALLEL OR FORWARD APPROACH TO THE CLOSET AS PART OF THE ACCESSIBLE ROUTE PER ICC ANSI A117.1 SECTION 1003.3 AND 1004.3
17. STACKABLE WASHER/DRYER UNIT.
18. FRONT LOADING SIDE BY SIDE WASHER/DRYER.
19. 16" DOUBLE WIRE SHELF AND HANGING ROD AT TYPE A UNITS. ROD SHALL NOT EXCEED 12" FROM INSIDE FACE OF FINISHED FRONT WALL.
20. 16" DOUBLE WIRE SHELF AT TYPE A UNITS. ROD SHALL NOT EXCEED 12" FROM INSIDE FACE OF FINISHED FRONT WALL.

21A VERTICAL WALL MOUNTED BIKE STORAGE. TOP SCREW TO BE +71"ABOVE FINISHED FLOOR, SEE DETAIL 13/A867.

21B. HORIZONTAL WALL-MOUNTED BIKE STORAGE. ALIGN MOUNTING SCREWS WITH VERT. STUD NEAREST GIVEN DIMENSION, SEE DETAIL 19/A867.

22. CLEAR FLOOR SPACE OF 30"x48" FOR A PARALLEL OR FORWARD APPROACH TO WINDOW. RPI-227
23. 16" SINGLE WIRE SHELF AND HANGING ROD AT TYPE B UNITS. ROD SHALL NOT EXCEED 12" FROM INSIDE FACE OF FINISHED FRONT WALL.
24. WALL DIMENSION TO MATCH SOFFIT DEPTH OVER WALL CABINET. ALIGN FACE OF FINISH. SEE DETAIL 3/A868.

LEVEL 7

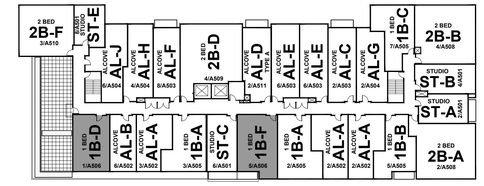


LEVEL 6

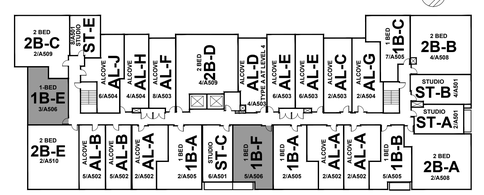


LEVEL 3-5

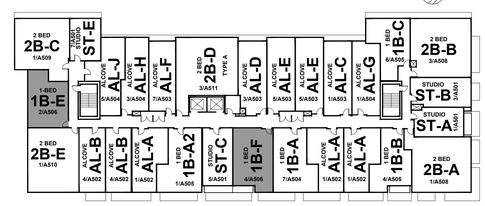


LEVEL 2

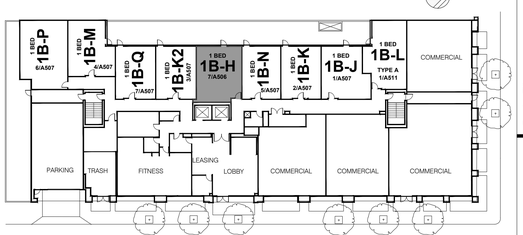


LEVEL 1


REGISTERED ARCHITECT
ROBERT S. LEEB
PORTLAND, OREGON
STATE OF OREGON

Leeb Architects
308 SW First Avenue
Suite 200
Portland, Or 97204
Phone: 503.228.2840
Fax 503.228.2907
leebarc.com


Project Title:
MODERA BUCKMAN
APARTMENTS

MILL CREEK RESIDENTIAL
220 NW 2ND AVENUE SUITE 900
PORTLAND, OR 97209

Drawing Title:
UNIT PLANS

| | |
|---|---|
| Date: | 06/02/2017 |
| Scale: | NTS |
| Drawn By: | JBJ |
| Project No.: | A16-16 |

Revision:
01.14.19 / RFI-027 - UNIT BIKE HANGER LOCATION
02.08.18 / ASI 008 - REVISIONS TO INTERIORS PACKAGE
AS-34 9.07.18 / CONSTRUCTION SET
AS-18 5.16.18 - COORDINATED DRAWING SET REISSUE
02.28.18 / ASI 003 - REVISIONS TO PLAN REVIEW CHECKSHEET, & OTHER REVS
6.08.18 - ASI 003 - UPDATED INTERIORS PACKAGE

A
506

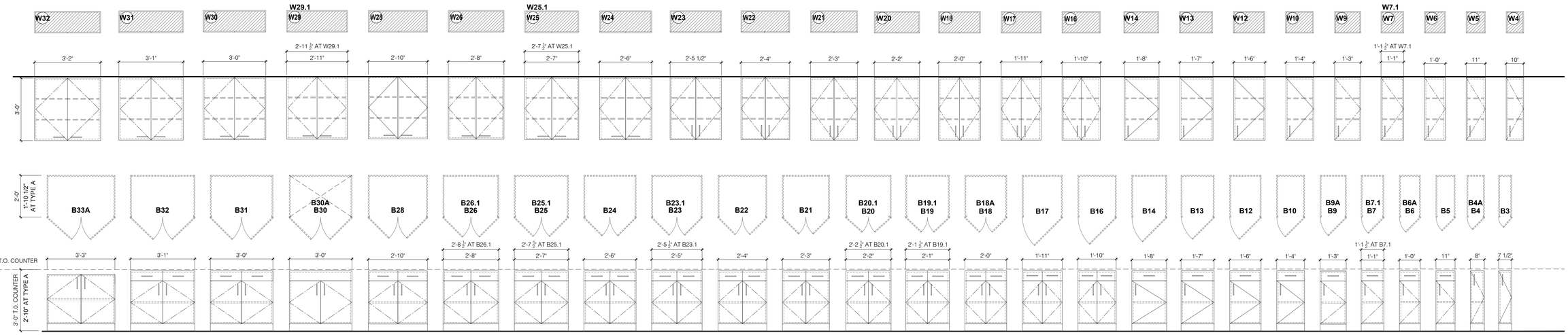


ELEVATION
NOTE: CABINETS WITH SUFFIX 'A' DENOTE TYPE A - ACCESSIBLE DIMENSIONING

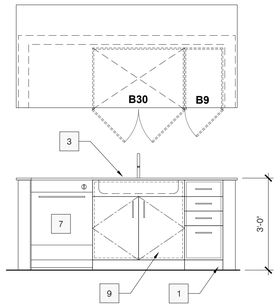


11 A530 GENERAL ISLAND INTERIOR ELEVATION - TYPE B
SCALE: 1/2"=1'-0"

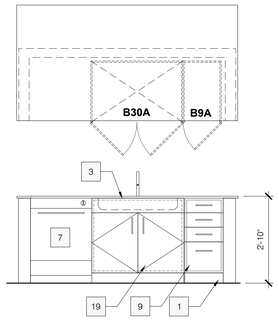


12 A530 GENERAL ISLAND INTERIOR ELEVATION - TYPE A
SCALE: 1/2"=1'-0"

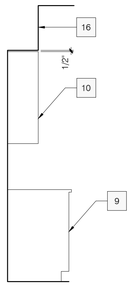


13 A530 GENERAL KITCHEN SOFFIT REVEAL
SCALE: 1/2"=1'-0"

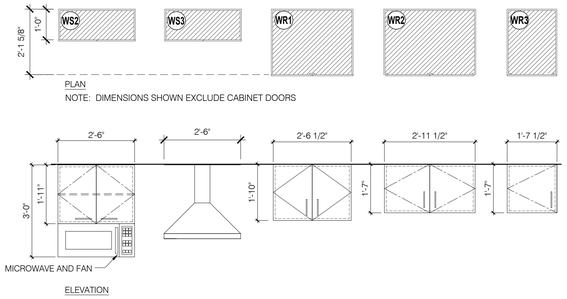


14 A530 TYPICAL UNIT KITCHEN UPPER CABINETS
SCALE: 1/2"=1'-0"

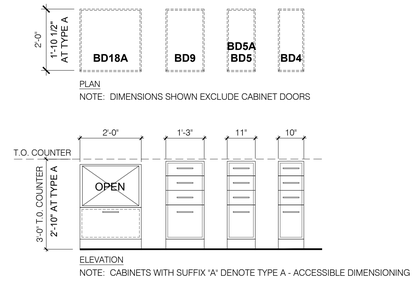


15 A530 TYPICAL UNIT KITCHEN BASE CABINETS
SCALE: 1/2"=1'-0"

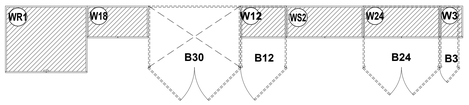


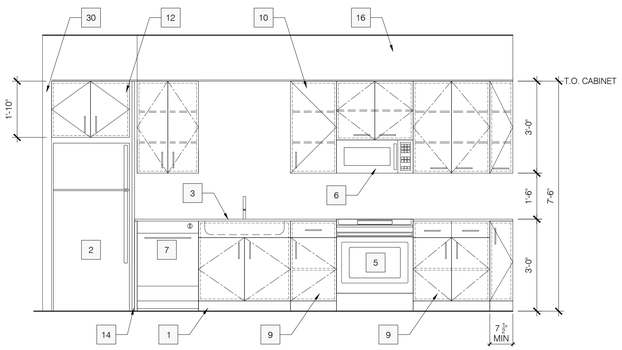


18 A530 GENERAL KITCHEN INTERIOR ELEVATION - TYPE B
SCALE: 1/2"=1'-0"

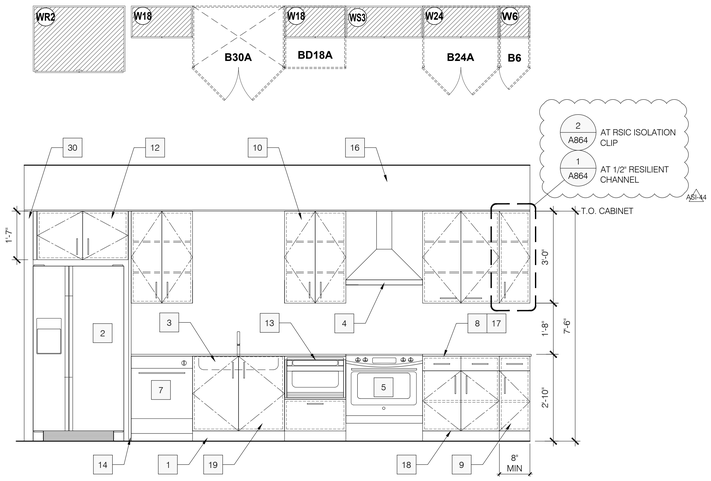


19 A530 GENERAL KITCHEN 1A INTERIOR ELEVATION - TYPE A
SCALE: 1/2"=1'-0"

## KITCHEN ELEVATION / PLAN KEY NOTES

1. 4" TOE SPACE, TYPICAL
2. REFRIGERATOR. 2'-8" AND 3'-4 1/2" CLR. APPLIANCE CUTOUT SHOWN. VERIFY DIMENSIONAL REQUIREMENTS WITH MANUFACTURER
3. KITCHEN SINK WITH GARBAGE DISPOSAL. PROVIDE INSULATION COVER AT EXPOSED PLUMBING.
4. RANGE HOOD W/ EXHAUST VENT TO EXTERIOR SEE DETAIL 3/A868. PROVIDE ACCESSIBLE WALL MOUNTED SWITCH FOR CONTROL OF POWER SPEED & LIGHT AT TYPE 'A' ACCESSIBLE UNITS AND ARE TO INCLUDE POWER, SPEED AND LIGHT WITH RHEOSTAT SWITCHES TO BE LOCATED ON BACK WALL OR SIDE WALL. SEE ELECTRICAL DRAWINGS FOR LOCATIONS AND CONTROL INFORMATION. HOOD CONTROLS MAY UTILIZED A REMOTE AS AN EXCEPTION TO THE ABOVE.
5. ELECTRIC RANGE/OVEN. VERIFY DIMENSIONAL REQUIREMENTS WITH MANUFACTURER. PROVIDE CODE COMPLIANT CONTROLS AT TYPE 'A' ACCESSIBLE UNITS WHICH INCLUDE CONTROLS THAT DO NOT REQUIRE INDIVIDUAL TO REACH OVER BURNERS.
6. MICROWAVE WITH EXHAUST VENT TO EXTERIOR. AT TYPE 'A' UNITS, PROVIDE UNDER-COUNTER MICROWAVE.
7. DISHWASHER. VERIFY DIMENSIONAL REQUIREMENTS WITH MANUFACTURER
8. COUNTER TOP. HEIGHT NOT TO EXCEED 34". DEPTH NOT TO EXCEED 24".
9. BASE CABINET SEE SCHEDULE
10. UPPER WALL CABINET SEE SCHEDULE
11. FILLER PANEL
12. 25 5/8" DEEP UPPER CABINET ABOVE REFRIGERATOR TYP. SEE SCHEDULE
13. UNDER-COUNTER MICROWAVE
14. REFRIGERATOR SIDE PANEL
15. COUNTERTOP MICROWAVE
16. SOFFIT ABOVE CABINETS
17. WORK SURFACE, MINIMUM 30" COUNTER LENGTH PER ICC/ANSI A117.1, 1003.12.3
18. WORK SURFACE BASE CABINET SHALL BE REMOVABLE WITHOUT REMOVAL OR REPLACEMENT OF WORK SURFACE, FLOOR FINISH TO EXTEND UNDER CABINETRY AND WALLS BEHIND AND SURROUNDING CABINETRY SHALL BE FINISHED, PER ICC/ANSI A117.1, SECTION 1003.12.3
19. SINK BASE CABINET SHALL BE REMOVABLE WITHOUT REMOVAL OR REPLACEMENT OF SINK, FLOOR FINISH TO EXTEND UNDER CABINETRY AND WALLS BEHIND AND SURROUNDING CABINETRY SHALL BE FINISHED, PER ICC/ANSI A117.1, SECTION 1003.12.4
20. ACCESSIBLE CLEAR FLOOR SPACE FOR FORWARD APPROACH TO THE SINK: 30 x 48 PER ICC/ANSI A117.1, 1003.12.4.1.
21. ACCESSIBLE CLEAR FLOOR SPACE FOR PARALLEL APPROACH TO THE SINK: 30 x 48 PER ICC/ANSI A117.1, 1004.12.2.
22. ACCESSIBLE CLEAR FLOOR SPACE FOR A FORWARD APPROACH AT THE WORK SURFACE: 30 x 48 PER ICC/ANSI A117.1, 1003.12.3.1.
23. ACCESSIBLE CLEAR FLOOR SPACE ADJACENT TO THE DISHWASHER: 30 x 48 PER ICC/ANSI A117.1, 1003.12.5.3.
24. ACCESSIBLE CLEAR FLOOR SPACE FOR A PARALLEL OR FORWARD APPROACH TO THE DISHWASHER: 30 x 48 PER ICC/ANSI A117.1, 1004.12.2.2.
25. ACCESSIBLE CLEAR FLOOR SPACE FOR PARALLEL APPROACH TO THE REFRIGERATOR: 30 x 48 PER ICC/ANSI A117.1, 1003.12.5.6 AND 1004.12.2.5
26. ACCESSIBLE CLEAR FLOOR SPACE FOR A FORWARD APPROACH, CENTERED ON THE RANGE: 30 x 48 PER ICC/ANSI A117.1, 1003.12.5.4 AND 1003.12.5.5
27. ACCESSIBLE CLEAR FLOOR SPACE FOR PARALLEL APPROACH, CENTERED ON THE RANGE: 30 x 48 PER ICC/ANSI A117.1, 1004.12.2.3 AND 1004.12.2.4
28. FINISH END PANEL TO BE INSTALLED. NOTE MAY NOT APPLY TO ALL INSTANCES OF KITCHEN TYPE. REFER TO INDIVIDUAL UNIT PLANS.
29. ACCESSIBLE CLEAR FLOOR SPACE FOR A FORWARD APPROACH TO THE REFRIGERATOR: 30 x 48 PER ICC/ANSI A117.1, 1003.12.5.6 AND 1004.12.2.5. AN "*" DENOTES AREAS WHERE, DEPENDING ON LAYOUT, A PARALLEL OR FORWARD APPROACH MAY BE REQUIRED. PLEASE REFER TO SPECIFIC FLOOR PLAN.
30. WINGWALL DEPTH TO MATCH SOFFIT DEPTH. ALIGN TO FACE OF FINISH

## CABINET SCHEDULE

UPPER

| NAME | WIDTH | DEPTH | HEIGHT | TYPE | NOTE |
|---|---|---|---|---|---|
| W4 | 10" | 1'-0" | 3'-0" | DOOR | |
| W5 | 11" | 1'-0" | 3'-0" | DOOR | |
| W6 | 1'-0" | 1'-0" | 3'-0" | DOOR | |
| W7 | 1'-1" | 1'-0" | 3'-0" | DOOR | |
| W7.1 | 1'-1 1/2" | 1'-0" | 3'-0" | DOOR | |
| W9 | 1'-3" | 1'-0" | 3'-0" | DOOR | |
| W10 | 1'-4" | 1'-0" | 3'-0" | DOOR | |
| W12 | 1'-6" | 1'-0" | 3'-0" | DOOR | |
| W13 | 1'-7" | 1'-0" | 3'-0" | DOOR | |
| W14 | 1'-8" | 1'-0" | 3'-0" | DOOR | |
| W16 | 1'-10" | 1'-0" | 3'-0" | 2 DOOR | |
| W17 | 1'-11" | 1'-0" | 3'-0" | 2 DOOR | |
| W18 | 2'-0" | 1'-0" | 3'-0" | 2 DOOR | |
| W20 | 2'-2" | 1'-0" | 3'-0" | 2 DOOR | |
| W21 | 2'-3" | 1'-0" | 3'-0" | 2 DOOR | |
| W22 | 2'-4" | 1'-0" | 3'-0" | 2 DOOR | |
| W23 | 2'-5 1/2" | 1'-0" | 3'-0" | 2 DOOR | |
| W24 | 2'-6" | 1'-0" | 3'-0" | 2 DOOR | |
| W25 | 2'-7" | 1'-0" | 3'-0" | 2 DOOR | |
| W25.1 | 2'-7 1/2" | 1'-0" | 3'-0" | 2 DOOR | |
| W26 | 2'-8" | 1'-0" | 3'-0" | 2 DOOR | |
| W28 | 2'-10" | 1'-0" | 3'-0" | 2 DOOR | |
| W29 | 2'-11" | 1'-0" | 3'-0" | 2 DOOR | |
| W29.1 | 2'-11 1/2" | 1'-0" | 3'-0" | 2 DOOR | |
| W30 | 3'-0" | 1'-0" | 3'-0" | 2 DOOR | |
| W31 | 3'-1" | 1'-0" | 3'-0" | 2 DOOR | |
| W32 | 3'-2" | 1'-0" | 3'-0" | 2 DOOR | |
| | | | | | |
| WS2 | 2'-6" | 1'-0" | 1'-11" | CAB / MICRO | |
| WS3 | - | - | - | FAN | DIMENSIONS PER MANUFACTURER |
| WR1 | 2'-6 1/2" | 2'-1 5/8" | 1'-10" | 2 DOOR | |
| WR2 | 2'-11 1/2" | 2'-1 5/8" | 1'-7" | 2 DOOR | |
| WR3 | 1'-7 1/2" | 2'-1 5/8" | 1'-7" | DOOR | |
| | | | | | |
| BD4 | 10" | 2'-0" | 2'-10 1/2" | DRAWER | |
| BD5 | 11" | 2'-0" | 2'-10 1/2" | DRAWER | |
| BD5A | 11" | 1'-10 1/2" | 2'-8 1/2" | DRAWER | |
| BD9 | 1'-3" | 2'-0" | 2'-10 1/2" | DRAWER | |
| BD18A | 2'-0" | 1'-10 1/2" | 2'-8 1/2" | DRAWER | OPENING FOR MICROWAVE |

LOWER

| NAME | WIDTH | DEPTH | HEIGHT | TYPE | NOTE |
|---|---|---|---|---|---|
| B3 | 7 1/2" | 2'-0" | 2'-10 1/2" | DOOR | |
| B4 | 8" | 2'-0" | 2'-10 1/2" | DOOR | |
| B4A | 8" | 1'-10 1/2" | 2'-8 1/2" | DOOR/DRAWER | ACCESSIBLE UNIT CABINETRY |
| B5 | 11" | 2'-0" | 2'-10 1/2" | DOOR/DRAWER | |
| B6 | 1'-0" | 2'-0" | 2'-10 1/2" | DOOR/DRAWER | |
| B6A | 1'-0" | 1'-10 1/2" | 2'-8 1/2" | DOOR/DRAWER | ACCESSIBLE UNIT CABINETRY |
| B7 | 1'-1" | 2'-0" | 2'-10 1/2" | DOOR/DRAWER | |
| B7.1 | 1'-1 1/2" | 2'-0" | 2'-10 1/2" | DOOR/DRAWER | |
| B9 | 1'-3" | 2'-0" | 2'-10 1/2" | DOOR/DRAWER | |
| B9A | 1'-3" | 1'-10 1/2" | 2'-8 1/2" | DOOR/DRAWER | ACCESSIBLE UNIT CABINETRY |
| B10 | 1'-4" | 2'-0" | 2'-10 1/2" | DOOR/DRAWER | |
| B12 | 1'-6" | 2'-0" | 2'-10 1/2" | DOOR/DRAWER | |
| B13 | 1'-7" | 2'-0" | 2'-10 1/2" | DOOR/DRAWER | |
| B14 | 1'-8" | 2'-0" | 2'-10 1/2" | DOOR/DRAWER | |
| B16 | 1'-10" | 2'-0" | 2'-10 1/2" | 2 DOOR/DRAWER | |
| B17 | 1'-11" | 2'-0" | 2'-10 1/2" | 2 DOOR/DRAWER | |
| B18 | 2'-0" | 2'-0" | 2'-10 1/2" | 2 DOOR/DRAWER | |
| B18A | 2'-0" | 1'-10 1/2" | 2'-8 1/2" | 2 DOOR/DRAWER | ACCESSIBLE UNIT CABINETRY |
| B19 | 2'-1" | 2'-0" | 2'-10 1/2" | 2 DOOR/DRAWER | |
| B19.1 | 2'-1 1/2" | 2'-0" | 2'-10 1/2" | 2 DOOR/DRAWER | |
| B20 | 2'-2" | 2'-0" | 2'-10 1/2" | 2 DOOR/DRAWER | |
| B20.1 | 2'-2 1/2" | 2'-0" | 2'-10 1/2" | 2 DOOR/DRAWER | |
| B21 | 2'-3" | 2'-0" | 2'-10 1/2" | 2 DOOR/DRAWER | |
| B22 | 2'-4" | 2'-0" | 2'-10 1/2" | 2 DOOR/DRAWER | |
| B23 | 2'-5" | 2'-0" | 2'-10 1/2" | 2 DOOR/DRAWER | |
| B23.1 | 2'-5 1/2" | 2'-0" | 2'-10 1/2" | 2 DOOR/DRAWER | |
| B24 | 2'-6" | 2'-0" | 2'-10 1/2" | 2 DOOR/DRAWER | |
| B25 | 2'-7" | 2'-0" | 2'-10 1/2" | 2 DOOR/DRAWER | |
| B25.1 | 2'-7 1/2" | 2'-0" | 2'-10 1/2" | 2 DOOR/DRAWER | |
| B26 | 2'-8" | 2'-0" | 2'-10 1/2" | 2 DOOR/DRAWER | |
| B26.1 | 2'-8 1/2" | 2'-0" | 2'-10 1/2" | 2 DOOR/DRAWER | |
| B28 | 2'-10" | 2'-0" | 2'-10 1/2" | 2 DOOR/DRAWER | |
| B30 | 3'-0" | 2'-0" | 2'-10 1/2" | 2 DOOR | |
| B30A | 3'-0" | 1'-10 1/2" | 2'-8 1/2" | 2 DOOR | ACCESSIBLE UNIT CABINETRY |
| B31 | 3'-0" | 2'-0" | 2'-10 1/2" | 2 DOOR/DRAWER | |
| B32 | 3'-1" | 2'-0" | 2'-10 1/2" | 2 DOOR/DRAWER | |
| B33A | 3'-3" | 1'-10 1/2" | 2'-8 1/2" | 2 DOOR | ACCESSIBLE UNIT CABINETRY |
| | | | | | |
| | | | | | |


REGISTERED ARCHITECT ROBERT S. LEEB PORTLAND, OREGON STATE OF OREGON
Leeb Architects
308 SW First Avenue
Suite 200
Portland, OR 97204
Phone 503.228.2840
Fax 503.228.2907
leebarc.com


Project Title:
MODERA BUCKMAN
APARTMENTS
MILL CREEK RESIDENTIAL
220 NW 2ND AVENUE SUITE 900
PORTLAND, OR 97209

Drawing Title:
KITCHEN CABINETS - SCHEDULES / CONFIGURATIONS

Revisions:
AS-18 5.16.18 - COORDINATED DRAWING SET REISSUE
AS-04 01.19 - ADD BIKE HALL BUILDING
AS-05 04.19 - PERMIT SET
AS-06 05.19 - PERMIT SET
AS-34 9/27.18 - CONSTRUCTION SET
AS-07 04.19 - FULL BUILDING PERMIT SET
AS-08 6.05.18 - AS1.023 - UPDATED INTERIORS PACKAGE

Date: 06/02/17
Scale: 1/2" = 1'-0"
Drawn By: JBJ
Project No.: A16-16

A
530

Saved by: Brian elliott Saved last: Tuesday, April 16, 2019 5:30:39 PM Plot Date: Wednesday, April 17, 2019 10:47:52 AM File Name: Z:\Projects\A16-16 Modera Buckman\03 Drawings\1 AS\1_Detail\Plans-Kitchen.dwg

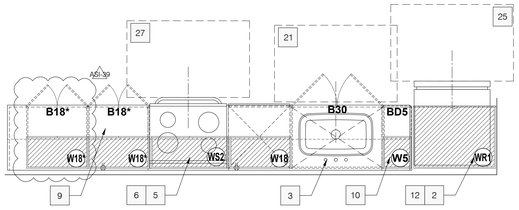


1 A531 KITCHEN K1
SCALE: 1/2"=1'-0"
UNIT(S): AL-J L3-7, 1B-N L1

| CABINET VARIABLES PER UNIT | | |
|---|---|---|
| UNIT NAME | LISTED | VARIABLE |
| AL-J L3-7 | B18*; W18* | B21; W21 |

*** CABINET TYPES VARY PER UNIT, MODIFY TYPE PER VARIABLE SHOWN ABOVE**

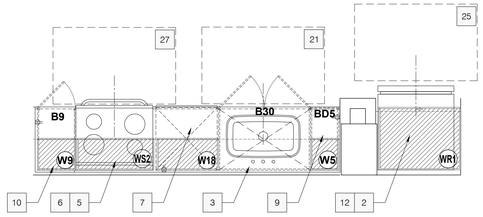


2 A531 KITCHEN K1A
SCALE: 1/2"=1'-0"
UNIT(S): 2B-C L2

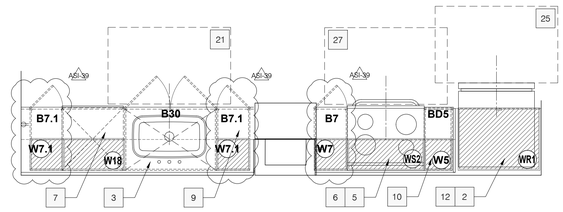


3 A531 KITCHEN K1B
SCALE: 1/2"=1'-0"
UNIT(S): ST-A L2

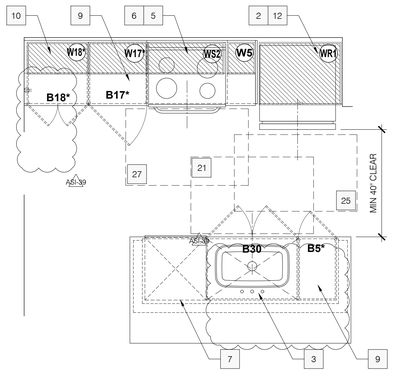


4 A531 KITCHEN K2
SCALE: 1/2"=1'-0"
UNIT(S): 1B-E L3-5, 2B-B L3-7, 2B-E L2-5

| CABINET VARIABLES PER UNIT | | |
|---|---|---|
| UNIT NAME | LISTED | VARIABLE |
| 1B-E L3-L5 | B18*; W18* | B25; W25 |
| | B17*; W17* | B16; W16 |
| | B5* | B13 |
| 2B-E L2 | B5* | B7 |
| 2B-E L3-L5 | B5* | B10 |

*** CABINET TYPES VARY PER UNIT, MODIFY TYPE PER VARIABLE SHOWN ABOVE**

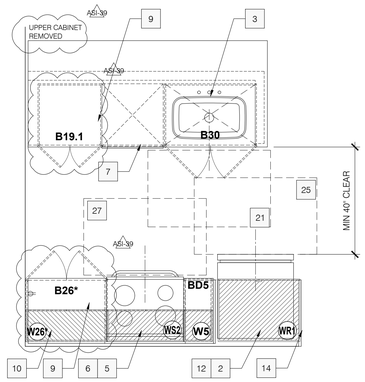


5 A531 KITCHEN K3
SCALE: 1/2"=1'-0"
UNIT(S): 1B-A L2-7, 1B-A2 L2

| CABINET VARIABLES PER UNIT | | |
|---|---|---|
| UNIT NAME | LISTED | VARIABLE |
| 1B-A2 L2 | B26*; W26* | B18; W18 |

*** CABINET TYPES VARY PER UNIT, MODIFY TYPE PER VARIABLE SHOWN ABOVE**

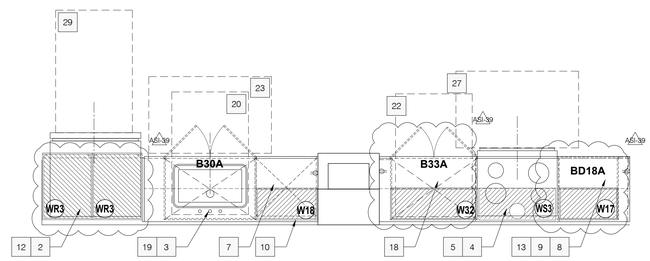


6 A531 KITCHEN K4 - TYPE A
SCALE: 1/2"=1'-0"
UNIT(S): 1B-L L1

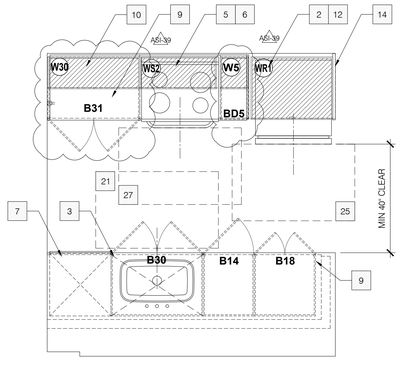


7 A531 KITCHEN K5
SCALE: 1/2"=1'-0"
UNIT(S): 1B-H L1

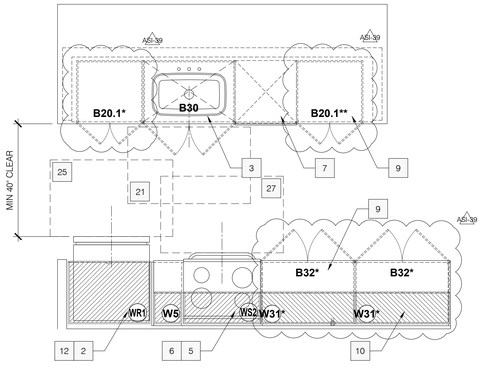


8 A531 KITCHEN K6
SCALE: 1/2"=1'-0"
UNIT(S): 1B-P L1, 2B-G L7

| CABINET VARIABLES PER UNIT | | |
|---|---|---|
| UNIT NAME | LISTED | VARIABLE |
| 2B-G L7 | B32*; W31* | B21; W21 |
| | B20.1* | B24 |
| | B20.1** | B22 |

*** CABINET TYPES VARY PER UNIT, MODIFY TYPE PER VARIABLE SHOWN ABOVE**

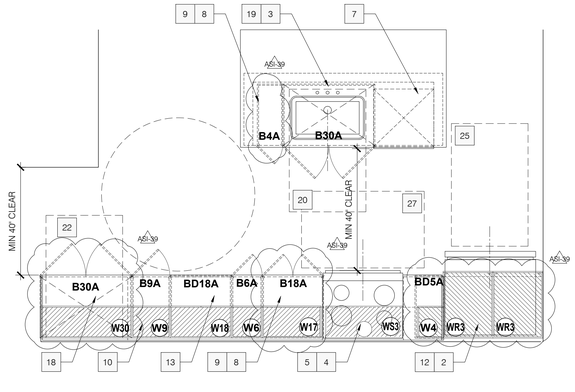


9 A531 KITCHEN K7 - TYPE A
SCALE: 1/2"=1'-0"
UNIT(S): 2B-D L2

## GENERAL NOTES - KITCHEN

1. NOT ALL KEYNOTES USED ON EACH SHEET
2. PROVIDE BLOCKING AS REQUIRED AT ALL GRAB BAR LOCATIONS, ALL UNITS
3. FOR TYPE 'A' ACCESSIBLE UNIT LOCATIONS, REFER TO THE ENLARGED UNIT KEY PLAN ON SHEET A500
4. KITCHEN LAYOUT SHOWN FOR DESIGN INTENT - REFERENCE APPROVED CABINET SHOP DRAWINGS FOR CONSTRUCTION
5. BASE CABINETS DIRECTLY UNDER SINK COUNTER AREA INCLUDING TOE BOARD AND SHELVING, SHALL BE REMOVABLE WITHOUT THE USE OF SPECIALIZED TOOL OR SPECIALIZED KNOWLEDGE, TO PROVIDE CLEARANCE FOR A WHEELCHAIR. FINISHED FLOORING SHALL BE PROVIDED ON THE FLOOR BENEATH THE COUNTERTOP
6. FIELD VERIFY DIMENSIONS FOR APPLIANCE CLEARANCES BEFORE ORDERING APPLIANCES.
7. SOFFITS ABOVE CABINETRY DIMENSIONS VARY, SEE REFLECTED CEILING PLANS

## KITCHEN ELEVATION / PLAN KEY NOTES

A5I-39 1. 4" TOE SPACE, TYPICAL
2. REFRIGERATOR. 2'-8" AND 3'-4 1/2" CLR. APPLIANCE CUTOUT SHOWN. VERIFY DIMENSIONAL REQUIREMENTS WITH MANUFACTURER
3. KITCHEN SINK WITH GARBAGE DISPOSAL. PROVIDE INSULATION COVER AT EXPOSED PLUMBING.
4. RANGE HOOD W/ EXHAUST VENT TO EXTERIOR SEE DETAIL 3/A868. PROVIDE ACCESSIBLE WALL MOUNTED SWITCH FOR CONTROL OF POWER SPEED & LIGHT AT TYPE 'A' ACCESSIBLE UNITS AND ARE TO INCLUDE POWER, SPEED AND LIGHT WITH RHEOSTAT SWITCHES TO BE LOCATED ON BACK WALL OR SIDE WALL. SEE ELECTRICAL DRAWINGS FOR LOCATIONS AND CONTROL INFORMATION. HOOD CONTROLS MAY UTILIZED A REMOTE AS AN EXCEPTION TO THE ABOVE.
5. ELECTRIC RANGE/OVEN. VERIFY DIMENSIONAL REQUIREMENTS WITH MANUFACTURER. PROVIDE CODE COMPLIANT CONTROLS AT TYPE 'A' ACCESSIBLE UNITS WHICH INCLUDE CONTROLS THAT DO NOT REQUIRE INDIVIDUAL TO REACH OVER BURNERS.
6. MICROWAVE WITH EXHAUST VENT TO EXTERIOR. AT TYPE 'A' UNITS, PROVIDE UNDER-COUNTER MICROWAVE.
7. DISHWASHER. VERIFY DIMENSIONAL REQUIREMENTS WITH MANUFACTURER
8. COUNTER TOP. HEIGHT NOT TO EXCEED 34". DEPTH NOT TO EXCEED 24".
A5I-39 9. BASE CABINET SEE SCHEDULE
10. UPPER WALL CABINET SEE SCHEDULE
A5I-39 11. FILLER PANEL
12. 25 5/8" DEEP UPPER CABINET ABOVE REFRIGERATOR TYP. SEE SCHEDULE
13. UNDER-COUNTER MICROWAVE
14. REFRIGERATOR SIDE PANEL
15. COUNTERTOP MICROWAVE
16. SOFFIT ABOVE CABINETS
17. WORK SURFACE, MINIMUM 30" COUNTER LENGTH PER ICC/ANSI A117.1, 1003.12.3
18. WORK SURFACE BASE CABINET SHALL BE REMOVABLE WITHOUT REMOVAL OR REPLACEMENT OF WORK SURFACE, FLOOR FINISH TO EXTEND UNDER CABINETRY AND WALLS BEHIND AND SURROUNDING CABINETRY SHALL BE FINISHED, PER ICC/ANSI A117.1, SECTION 1003.12.3
19. SINK BASE CABINET SHALL BE REMOVABLE WITHOUT REMOVAL OR REPLACEMENT OF SINK, FLOOR FINISH TO EXTEND UNDER CABINETRY AND WALLS BEHIND AND SURROUNDING CABINETRY SHALL BE FINISHED, PER ICC/ANSI A117.1, SECTION 1003.12.4
20. ACCESSIBLE CLEAR FLOOR SPACE FOR FORWARD APPROACH TO THE SINK: 30 x 48 PER ICC/ANSI A117.1, 1003.12.4.1.
21. ACCESSIBLE CLEAR FLOOR SPACE FOR PARALLEL APPROACH TO THE SINK: 30 x 48 PER ICC/ANSI A117.1, 1004.12.2.
22. ACCESSIBLE CLEAR FLOOR SPACE FOR A FORWARD APPROACH AT THE WORK SURFACE: 30 x 48 PER ICC/ANSI A117.1, 1003.12.3.1.
23. ACCESSIBLE CLEAR FLOOR SPACE ADJACENT TO THE DISHWASHER: 30 x 48 PER ICC/ANSI A117.1, 1003.12.5.3.
24. ACCESSIBLE CLEAR FLOOR SPACE FOR A PARALLEL OR FORWARD APPROACH TO THE DISHWASHER: 30 x 48 PER ICC/ANSI A117.1, 1004.12.2.2.
25. ACCESSIBLE CLEAR FLOOR SPACE FOR PARALLEL APPROACH TO THE REFRIGERATOR: 30 x 48 PER ICC/ANSI A117.1, 1003.12.5.6 AND 1004.12.2.5
26. ACCESSIBLE CLEAR FLOOR SPACE FOR A FORWARD APPROACH, CENTERED ON THE RANGE: 30 x 48 PER ICC/ANSI A117.1, 1003.12.5.4 AND 1003.12.5.5
27. ACCESSIBLE CLEAR FLOOR SPACE FOR PARALLEL APPROACH, CENTERED ON THE RANGE: 30 x 48 PER ICC/ANSI A117.1, 1004.12.2.3 AND 1004.12.2.4
28. FINISH END PANEL TO BE INSTALLED. NOTE MAY NOT APPLY TO ALL INSTANCES OF KITCHEN TYPE. REFER TO INDIVIDUAL UNIT PLANS.
29. ACCESSIBLE CLEAR FLOOR SPACE FOR A FORWARD APPROACH TO THE REFRIGERATOR: 30 x 48 PER ICC/ANSI A117.1, 1003.12.5.6 AND 1004.12.2.5. AN *** DENOTES AREAS WHERE, DEPENDING ON LAYOUT, A PARALLEL OR FORWARD APPROACH MAY BE REQUIRED. PLEASE REFER TO SPECIFIC FLOOR PLAN.
30. WINGWALL DEPTH TO MATCH SOFFIT DEPTH. ALIGN TO FACE OF FINISH

REGISTERED ARCHITECT
ROBERT S. LEEB
PORTLAND, OREGON
STATE OF OREGON

Leeb Architects

Project Title:
MODERA BUCKMAN
APARTMENTS

MILL CREEK RESIDENTIAL
220 NW 2ND AVENUE SUITE 900
PORTLAND, OR 97209

Drawing Title:
DETAIL PLANS - KITCHENS

| Revision | |
|---|---|
| A5I-39 | 11.21.18 - ASI 039 - REVISIONS TO INTERIORS PACKAGE |
| A5I-38 | 10.31.18 - ASI 038 - UPDATE TO CONTRACT SET |
| A5I-37 | 04.30.18 - ASI 037 - COORDINATED INTERIORS PACKAGE |
| A5I-36 | 5.16.18 - COORDINATED BUILDING SET REVISE |
| A5I-34 | 04.30.18 - ASI 014 - ELEVATOR ADJUSTMENT |
| A5I-33 | 03.29.18 - ASI 033 - 100% PERMIT SET |
| A5I-32 | 03.09.18 - ASI 032 - FULL BUILDING PERMIT SET |

Date: 06/02/17
Scale: 1/2" = 1'-0"
Drawn By: JBJ
Project No: A16-16

A
531

Saved by: James wellington Saved last: Tuesday, December 4, 2018 2:39:42 PM Plot Date: Tuesday, December 4, 2018 3:00:11 PM File Name: Z:\Projects\A16-16 Modera Buckman\03 Drawings\1 A531_DetailPlans-Kitchen.dwg

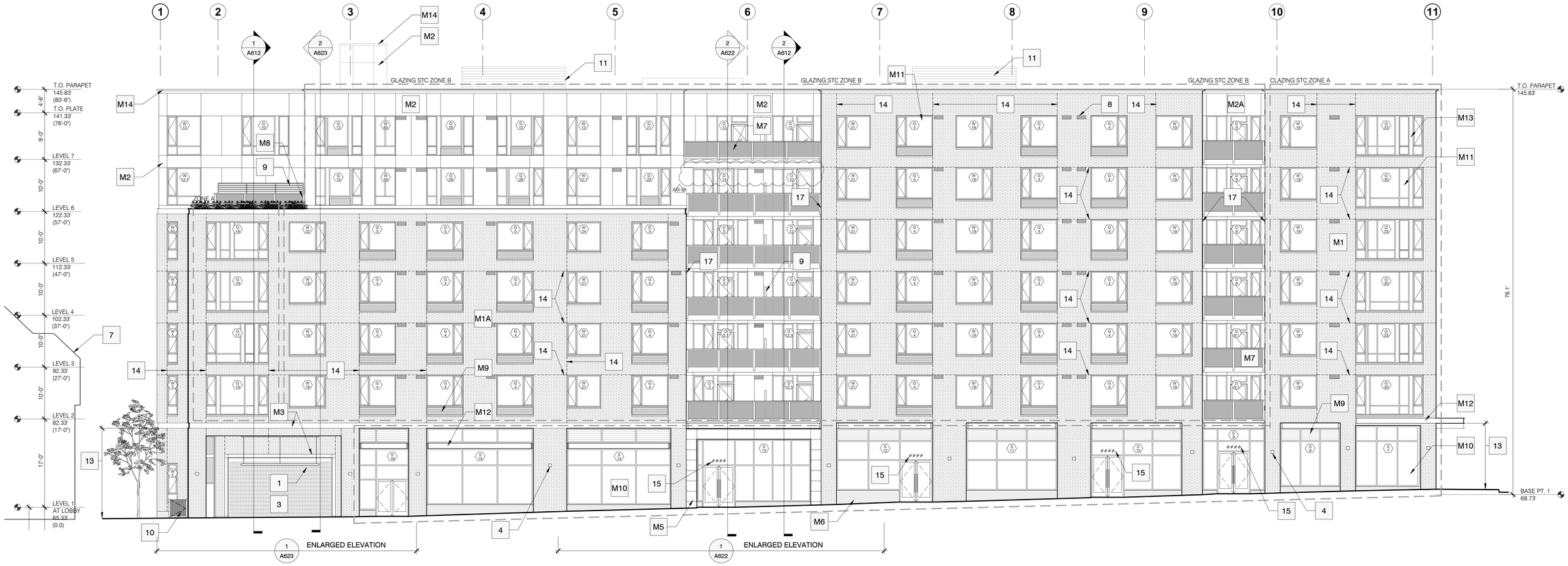


1 A602 EXTERIOR ELEVATION - EAST

SCALE: 1/8" = 1'-0"

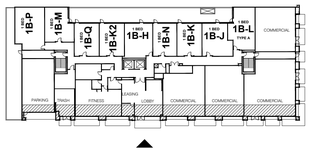


KEY PLAN

## ELEVATION GENERAL NOTES

1. SEE CIVIL FOR GRADES ADJACENT TO BUILDING
2. NOT ALL KEYNOTES USED ON EVERY SHEET

## ELEVATION KEY NOTES

1. MAXIMUM CLEARANCE BAR
2. FDC LOCATION
3. HIGH SPEED COILING GARAGE DOOR
4. WALL SCONCE. SEE ELECTRICAL
5. OUTLINE OF BUILDING BEYOND
6. ALUMINUM SLAT FENCE
7. OUTLINE OF NEIGHBORING BUILDING
8. EXTERIOR UNIT VENT
9. ALUMINUM FRAME AND SLAT PRIVACY SCREEN
10. SECURITY GATE
11. ALUMINUM SLAT MECHANICAL SCREEN
12. DOWNSPOUT
13. LINE OF DEMARCATION FOR ANTI-GRAFFITI MASONRY SEALER
14. BRICK CONTROL JOINT
15. BUILDING NUMBER / STREET ADDRESS: 4" MIN. ADDRESS NUMBER SIGNAGE ON GLASS. .5" MIN. STROKE AND CONTRASTING COLOR PER PFC 505.1 PREMISES IDENTIFICATION
16. FDC SIGNAGE WITH RAISED LETTERS AT LEAST 1" IN SIZE. SIGNAGE TO MEET REQUIREMENTS OF PFC 912.4.
17. PROVIDE BRICK CONTROL JOINT 24" FROM CORNER AT BRICK RETURN

## WINDOW / DOOR DESIGNATIONS

W 1.1 SINGLE WINDOW OR WINDOW GROUPING. SEE A810-A813.1

G 1.1 WINDOW GROUPING WITH PTAC'S. SEE A814-A816

D 1.1 WINDOW AND DOOR GROUPING. SEE A817-A817.1

S 1.1 STOREFRONT ASSEMBLY. SEE A818-A820.1

NOTE: SEE PLANS, UNIT PLANS AND ENLARGED PLANS FOR DOOR REFERENCES

## NOISE LEVEL ZONES

ZONE A-C

NOISE LEVEL ZONES AT EXTERIOR WALL TO DETERMINE STC RATING REQUIREMENTS OF WINDOWS, DOORS AND PTAC UNITS. COORDINATE SOUND RATING REQUIREMENTS WITH VENEKLASEN ASSOCIATES. EXTERIOR FACADE ACOUSTICAL REPORT (6.25.17), TABLE 3 - CALCULATED INTERIOR LDN NOISE LEVELS.

## MATERIAL KEYNOTE LEGEND

REFER TO A902-A905 FOR MATERIAL LOCATIONS

- M1 BRICK, RUNNING BOND - COAL CREEK
- M1A BRICK, RUNNING BOND - MEDITERRANEAN
- M2 FIBER CEMENT PANEL (TE 20, DARK)
- M2A FIBER CEMENT PANEL (TE 00, LIGHT)
- M3 STEEL CHANNEL
- M4 CMU BLOCK, SEALED
- M5 PORCELAIN PANEL
- M6 SMOOTH CONCRETE
- M7 BIDDER DESIGNED METAL FABRICATED BALCONY, ALUMINUM
- M8 BIDDER DESIGNED METAL GUARDRAIL WITH GLASS, ALUMINUM
- M9 INTEGRAL METAL VENT LOUVER
- M10 STOREFRONT GLAZING SYSTEM, TRANSPARENT AND TRANSLUCENT GLASS, SEE SCHEDULE AND A818-A201.1
- M11 COMMERCIAL GRADE VINYL WINDOWS
- M12 STEEL CANOPY
- M13 FLAT METAL PANEL INFILL
- M14 SHEET METAL COPING

REGISTERED ARCHITECT STATE OF OREGON
ROBERT S. LEEB
PORTLAND, OREGON

Leeb Architects

Project Title:
MODERA BUCKMAN
APARTMENTS

MILL CREEK RESIDENTIAL
220 NW 2ND AVENUE SUITE 900
PORTLAND, OR 97209

Drawing Title:
EXTERIOR ELEVATIONS - EAST

| | |
|---|---|
| Date: | 07/27/2017 |
| Scale: | 1/8" = 1'-0" |
| Drawn By: | JML, BE |
| Project No.: | A16-16 |

| Revision | |
|---|---|
| A5 | 11.21.18 - AS 030 - REVISIONS TO DRAWING SET REISSUE |
| A4 | 8.14.18 - AS 030 - REVISIONS PACKAGE |
| A3 | 5.16.18 - AS 029 - REVISIONS TO DRAWING SET REISSUE |
| A2 | 4.5.18 - AS 028 - REVISIONS TO DRAWING SET REISSUE |
| A1 | 3.26.18 - AS 027 - REVISIONS TO DRAWING SET REISSUE |
| A0 | 2.5.18 - AS 026 - ZONING PLAN CHECK REVIEW CHECKSHEET |
| A0 | 12.22.17 - AS 025 - ZONING PLAN CHECK REVIEW CHECKSHEET & OTHER REQ'S |
| A0 | 10.20.17 - AS 007 - FULL BUILDING PERMIT SET |
| A0 | 06.06.18 - AS 021 - MOCKUP DRAWINGS |

A
602

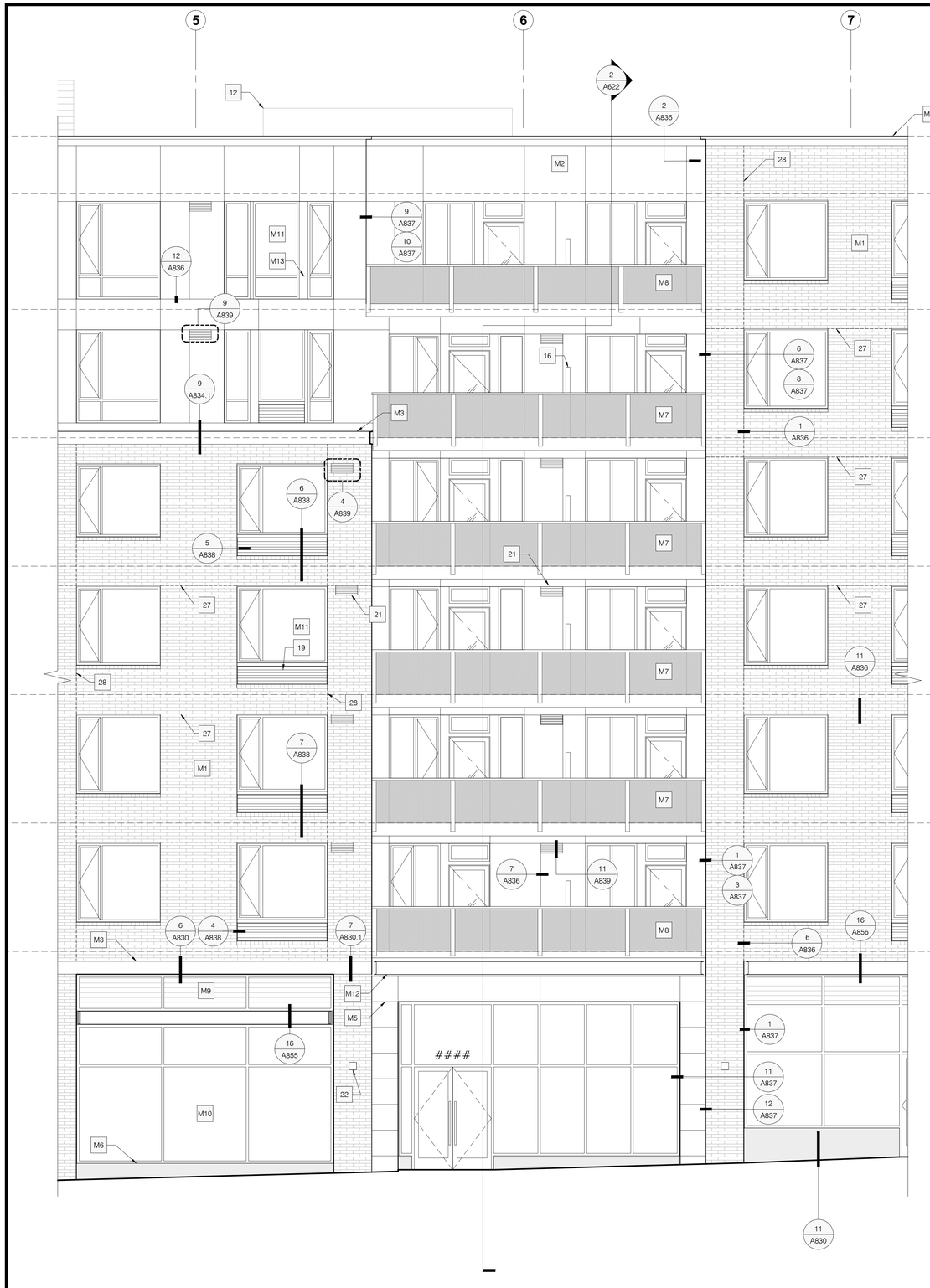


1 / A622 ENLARGED EAST ELEVATION
SCALE: 1/4"=1'-0"

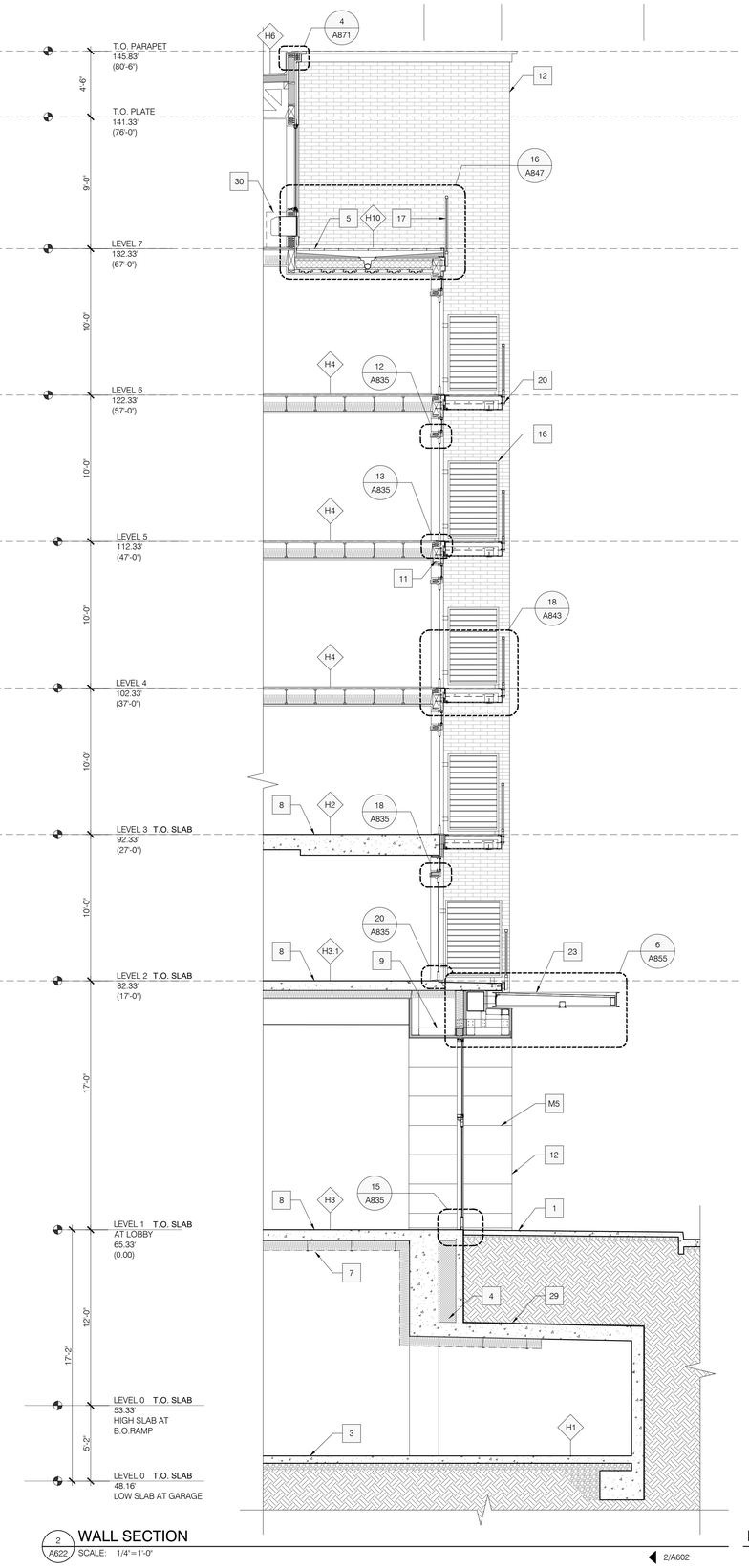


2 / A622 WALL SECTION
SCALE: 1/4"=1'-0"

2/A602

## WALL SECTION GENERAL NOTES

NOTE: NOT ALL KEYNOTES ARE USED PER SHEET

1. FLOOR TO FLOOR DIMENSIONS ARE TO TOP OF FLOOR SHEATHING, U.N.O.
2. WALL, FLOOR, CEILING, ROOF ASSEMBLY TYPES ARE REFERENCED ON WALL SECTIONS - SEE SHEETS A801-803 FOR ASSEMBLY TYPES

## MATERIAL KEYNOTE LEGEND

- M1 BRICK, RUNNING BOND
- M2 FIBER CEMENT PANEL
- M3 STEEL CHANNEL
- M4 CMU BLOCK
- M5 PORCELAIN PANEL
- M6 SMOOTH CONCRETE
- M7 ALUMINUM BOLT ON BALCONY SYSTEM
- M8 ALUMINUM RAILING SYSTEM WITH GLASS INFILL PANELS
- M9 INTEGRAL METAL VENT LOUVER
- M10 STOREFRONT GLAZING SYSTEM, TRANSPARENT AND TRANSLUCENT GLASS, SEE SCHEDULE
- M11 COMMERCIAL GRADE VINYL WINDOWS
- M12 STEEL CANOPY
- M13 CLADDING/TRIM INFILL
- M14 SHEET METAL COPING

## WALL SECTION KEY NOTES

1. CONCRETE SLAB ON GRADE - SEE CIVIL DRAWINGS
2. HIGH SPEED COILING GRILLE PER DOOR SCHEDULE
3. SLAB ON GRADE WITH - COORDINATE SLAB SUBSTRATE AND SURFACE PREPARATION WITH STRUCTURAL
4. FOAM INSULATION BETWEEN SLABS
5. PEDESTAL PAVERS ON DECK - SEE DETAILS FOR WATERPROOFING
6. ALUMINUM FRAMED FENCE WITH ALUMINUM SLATS. SEE DETAIL 16/A831.1
7. BATT INSULATION - REFER TO REFLECTED CEILING PLANS FOR EXTENT OF INSULATION WHERE APPLICABLE. INSULATION TYPE AND R-VALUE IS REFERENCED IN SPECIFICATION SECTION 072100. ALSO SEE DETAIL 5/A866
8. ELEVATED PT SLAB - SEE STRUCTURAL DRAWINGS
9. LT GAUGE STEEL FRAMING - REFER TO STRUCTURAL STUD SCHEDULE AND ARCHITECTURAL WALL TYPES SHEETS A801-A802 FOR STUD SIZE AND DETAILS
10. WOOD FRAMING - REFER TO STRUCTURAL STUD SCHEDULE AND ARCHITECTURAL WALL TYPES SHEETS A801-A802 FOR STUD SIZE AND DETAILS
11. HEADER - REFER TO HDR SCHEDULE BY STRUCTURAL FOR HEADER SIZE. B.O. HDR ELEV PER DOOR / SCHEDULE
12. LINE OF BUILDING BEYOND-OR-BUILDING SHOWN IN ELEVATION BEYOND
13. OMITTED
14. OMITTED
15. OMITTED
16. ALUMINUM FRAME AND SLAT PRIVACY SCREEN
17. EXTERIOR GUARDRAIL WITH GLASS PANELS
18. ALUMINUM SLAT MECHANICAL SCREEN
19. CUSTOM GRILL COVER AT THROUGH WALL PTAC UNIT (PACKAGED TERMINAL AIR CONDITIONER)
20. PREFABRICATED BALCONY
21. EXTERIOR UNIT VENT. SEE SHEET 839
22. LIGHT FIXTURE PER SCHEDULE. SEE ELECTRICAL SHEETS
23. STEEL CANOPY
24. PLANTER - SEE LANDSCAPE
25. OMITTED
26. FDC LOCATION - SEE DETAIL 3/A836
27. HORIZONTAL CONTROL JOINT
28. VERTICAL CONTROL JOINT- SEE DETAIL 1/836
29. FOUNDATION WALL WATERPROOFING SYSTEM
30. PTAC COVER - SEE SHEET A868

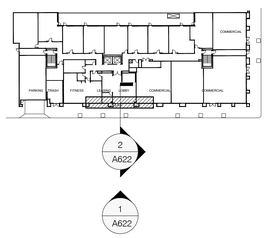


2 / A622
1 / A622

KEY PLAN LEVEL 1

REGISTERED ARCHITECT
ROBERT S. LEEB
PORTLAND, OREGON
STATE OF OREGON

Leeb Architects
308 SW First Avenue
Suite 200
Portland, Or 97204
Phone: 503.228.2840
Fax 503.228.2907
leebarc.com

Project Title:
MODERA BUCKMAN
APARTMENTS
MILL CREEK RESIDENTIAL
220 NW 2ND AVENUE SUITE 900
PORTLAND, OR 97209

Drawing Title:
WALL SECTION

Date: 06/02/2017
Scale: 1/4" = 1'-0"
Drawn By: JBJ, RI, JML
Project No: A16-16

Revision:
A5-34 9.07.18 - CONSTRUCTION SET
A6-36 06.13.18 - A5-26 - ZONING PLAN CHECK REVIEW RESPONSE
A6-37 06.18.18 - A5-27 - COORDINATED DRAWING SET - ISSUED FOR PERMIT
A6-38 10.26.18 - A5-012 - RESPONSE TO PLAN REVIEW COMMENTS - ADDENDUM
A7-1 10.23.17 - A5-007 - FULL BUILDING PERMIT SET

A
622

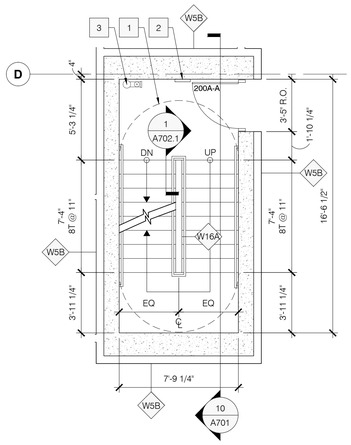


3 A701 STAIR A PLAN LEVEL 2
SCALE: 1/4"=1'-0"
1/A302

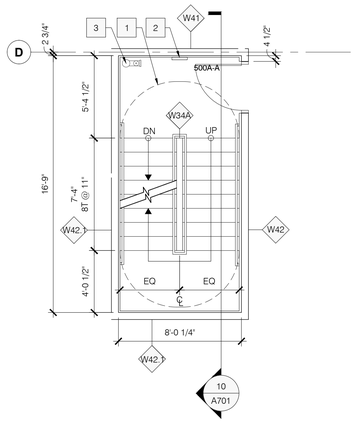


6 A701 STAIR A PLAN LEVEL 5
SCALE: 1/4"=1'-0"
1/A305

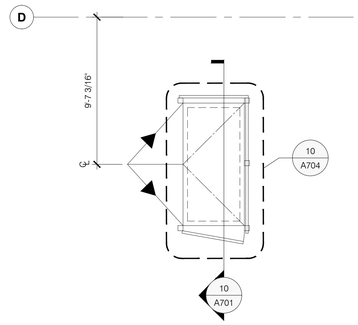


9 A701 STAIR A PLAN ROOF
SCALE: 1/4"=1'-0"
1/A308

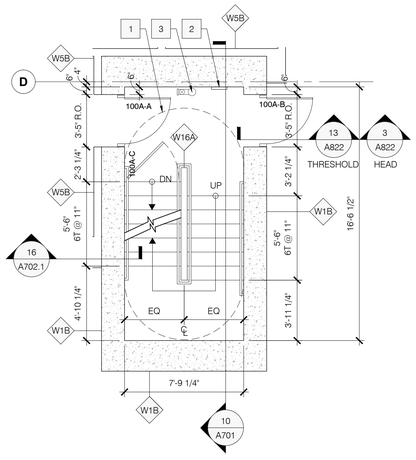


2 A701 STAIR A PLAN LEVEL 1
SCALE: 1/4"=1'-0"
1/A301

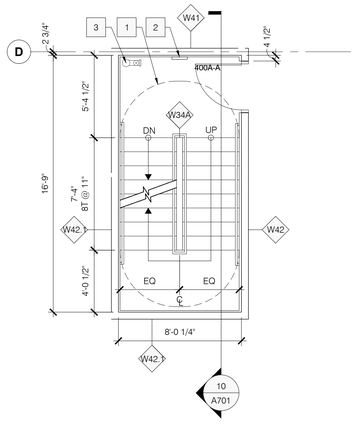


5 A701 STAIR A PLAN LEVEL 4
SCALE: 1/4"=1'-0"
1/A304

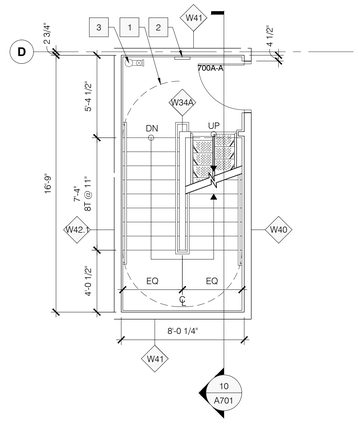


8 A701 STAIR A PLAN LEVEL 7
SCALE: 1/4"=1'-0"
1/A307

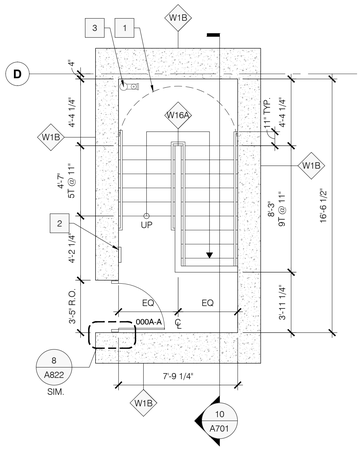


1 A701 STAIR A PLAN LOWER LEVEL
SCALE: 1/4"=1'-0"
1/A300

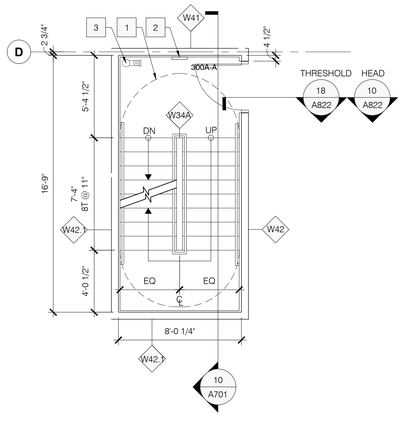


4 A701 STAIR A PLAN LEVEL 3
SCALE: 1/4"=1'-0"
1/A303

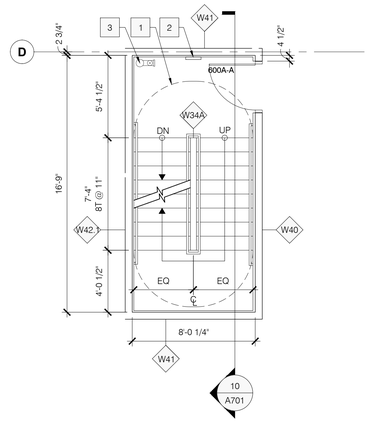


7 A701 STAIR A PLAN LEVEL 6
SCALE: 1/4"=1'-0"
1/A306

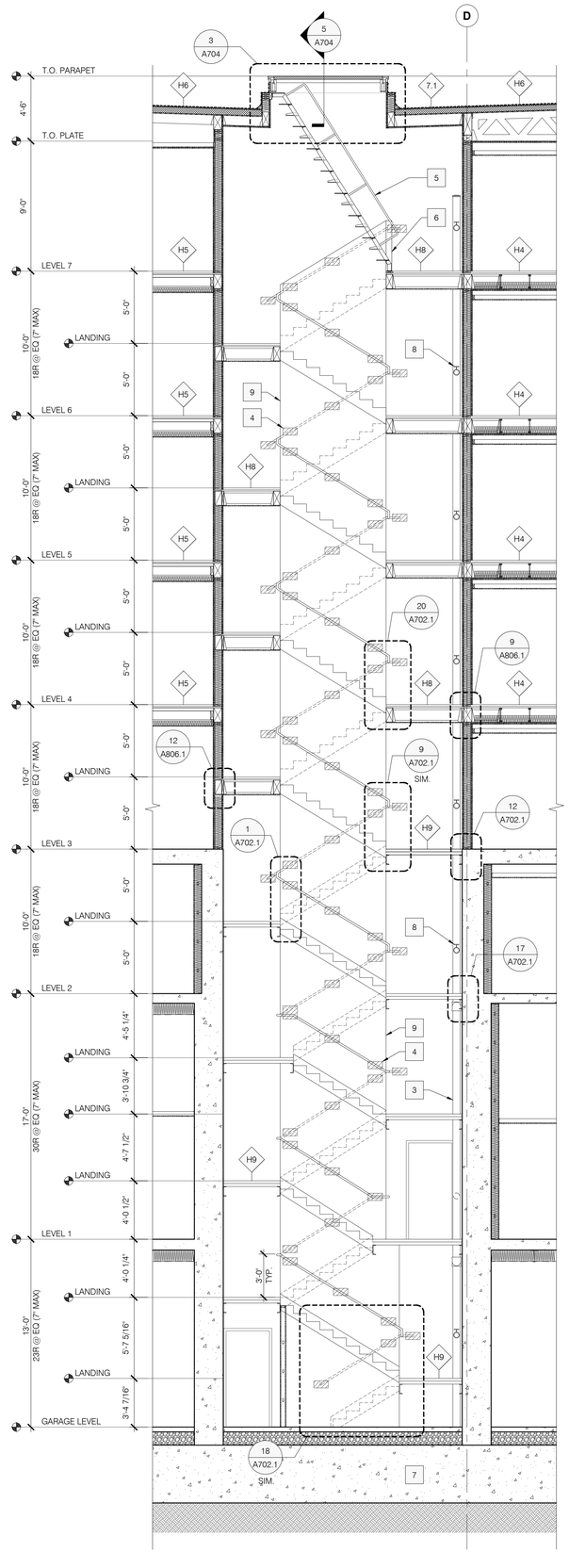


10 A701 STAIR A SECTION
SCALE: 1/4"=1'-0"

## STAIR SECTION GENERAL NOTES

1. SEE STAIR PLAN FOR SECTION CUT LOCATIONS
2. FLOOR TO FLOOR DIMENSIONS ARE TO TOP OF FLOOR SHEATHING
3. SEE WALL SECTIONS FOR FLOOR/CEILING/ROOF ASSEMBLY TYPE REFERENCES
4. SEE DETAIL SHEETS A801-A803 FOR ASSEMBLY TYPES
5. NOT ALL KEYNOTES ARE USED ON EACH SECTION SHEET
6. DIMENSIONS IN STAIR PLANS ARE BASED ON FACE OF STUD / CONCRETE, BUILDING GRID LINES AND DOOR OPENING CENTERLINES

## STAIR SECTION KEY NOTES

1. CLEAR STAIR WIDTH PATH @ LANDING
2. PROVIDE SIGN AT EACH FLOOR LANDING IN EXIT ENCLOSURES CONNECTING MORE THAN THREE STORIES DESIGNATING THE FLOOR LEVEL, THE TERMINUS OF THE TOP AND BOTTOM OF THE EXIT ENCLOSURE AND THE IDENTIFICATION OF THE STAIR. THE SIGNAGE SHALL ALSO STATE THE STORY OF, AND THE DIRECTION TO, THE EXIT DISCHARGE AND THE AVAILABILITY OF ROOF ACCESS FROM THE ENCLOSURE FOR THE FIRE DEPARTMENT. THE SIGN SHALL BE LOCATED 5 FEET ABOVE THE FLOOR LANDING IN A POSITION THAT IS READILY VISIBLE WHEN THE DOORS ARE IN THE OPEN AND CLOSED POSITIONS. FLOOR LEVEL IDENTIFICATION SIGNS IN TACTILE CHARACTERS COMPLYING WITH ICC A117.1 SHALL BE LOCATED AT EACH FLOOR LEVEL LANDING ADJACENT TO THE DOOR LEADING FROM THE ENCLOSURE INTO THE CORRIDOR TO IDENTIFY THE FLOOR LEVEL.
3. FIRE PROTECTION STANDPIPE
4. BLOCKING IN WALL FOR HANDRAILS, SEE SHEET A702.1
5. ROOF ACCESS LADDER WITH ROOF ACCESS HATCH.
6. 42" HIGH WALL. ANCHOR/BRACE WOOD FRAMING EACH WALL.
7. FOOTING - SEE STRUCTURAL DRAWINGS.
8. STANDPIPE AT STAIR LANDINGS. TYP. 36" A.F.F.
9. WALL BETWEEN STAIRS
10. GUARDRAIL CABLE INFILL SPACED EQUALLY, WITH NO GREATER OPENING THAN 4"- NOT SHOWN FOR CLARITY
11. LINE OF BUILDING BEYOND

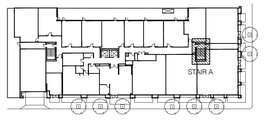


KEY PLAN LEVEL 1


REGISTERED ARCHITECT
ROBERT S. LEEB
PORTLAND, OREGON
STATE OF OREGON

Leeb Architects
308 SW First Avenue
Suite 200
Portland, Or 97204
Phone 503.228.2840
Fax 503.228.2907
leebarc.com


Project Title:
MODERA BUCKMAN
APARTMENTS

MILL CREEK RESIDENTIAL
220 NW 2ND AVENUE SUITE 900
PORTLAND, OR 97209

Drawing Title:
STAIR PLAN/SECTION - STAIR A

| | |
|---|---|
| Date: | 06/02/2017 |
| Scale: | 1/4" = 1'-0" |
| Drawn By: | JBJ / MV |
| Project No.: | A16-16 |

Revision:
- AS-34 9.07.18 - CONSTRUCTION SET
- DRAWING SET REISSUE
- 1 10.26.17 - AS 006 - PODIUM PERMIT ADDENDUM
- 2 10.26.17 - AS 004 - FULL BUILDING PERMIT SET

A
701